JANSON CONTROLS

Professional manufacturer in electric drive
and industry control since 2012



Energy-saving Intelligent Efficient

AC Motor Smart Soft Starter
Built-in Bypass Motor Soft Starter

Adaptable motor power: 15 to 320kW;
MODBUS RS485.

Asynchronous motor

Product Description

Thank you for choosing SSD60 series soft starter! SSD60 series soft starter hasfollowing features:



❶ Wiring Made Simple

Built-in bypass contactor eliminates external wiring – install in one step.

❷ Eccentric Load? No Problem

Unique swing start function enables smooth starting even under unbalanced loads.

❸ Customizable Protection

Thermal overload protection can be set according to actual load. Each protection function can be enabled or disabled independently.

❹ One Device, Six Start Modes

Offers 6 starting methods and 2 driving modes (torque/smooth), adaptable to various working conditions.

❺ Smart Interlock

Two independent programmable relays with delay settings make it easy to interlock with peripheral devices.

❻ At-a-Glance Monitoring

Simultaneous three-phase current display, dual-language (English/Chinese) large screen, and one-click fault log review.

❼ Bi-Directional Jog Control

Supports jog control in both forward and reverse directions for precise motor positioning.

❽ Flexible Stopping Options

Choose from free stop, soft stop, or DC braking to suit your needs.

❾ Remote Communication

4–20 mA analog output + Modbus RTU communication for remote monitoring and one-click parameter download from the control system.

❿ Power Matching Accuracy

If the soft starter's rated power exceeds the actual load, the rated current can be adjusted to match the real load, ensuring precise startup, operation, and protection settings.

Product Selection Table

Item No.	Adaptable Motor (kW)	Input Current (A)	Sectional area (mm^2)	W (mm)	H (mm)	D (mm)	W1 (mm)	H1 (mm)	ØD (mm)	GW (kg)
3 Phase Input and 3 Phase Output 380V (-15%~+15% Tolerance)										
SSD60-4T-15	15	30	10	155	320	195	135	295	Ø6	5
SSD60-4T-22	22	45	16							
SSD60-4T-30	30	60	25							
SSD60-4T-37	37	75	25							
SSD60-4T-45	45	90	35							
SSD60-4T-55	55	110	35							
SSD60-4T-75	75	150	50	245	410	255	200	345	Ø8	15
SSD60-4T-90	90	180	70							
SSD60-4T-110	110	230	70							
SSD60-4T-132	132	260	95	300	605	250	215	536	Ø8	22
SSD60-4T-160	160	320	120							
SSD60-4T-185	185	370	120							
SSD60-4T-200	200	400	150							
SSD60-4T-250	250	500	240	340	661	260	265	590	Ø10	30
SSD60-4T-280	280	560	240							
SSD60-4T-320	320	630	150*2							

Product functional parameters

Control power supply		AC 380V(-10%~15%), 50hz/60hz (provided internally, users do not need to connect externally.
Input power supply		AC 380V-10%~15% 50Hz/60Hz
Applicable motor		General squirrel cage AC asynchronous motor
Starting mode		Current limiting starting; Voltage ramp start; Sudden tripping current limiting start; Jump voltage ramp start; Inching start; Swing start.
Stop mode		Free shutdown; Soft shutdown; DC brake stop.
Relay output		Two way programmable output relay
Starting frequency		Not more than 15 times in an hour
Protection function		Input phase loss, startup overload, operation overload, overcurrent, current imbalance, overvoltage, undervoltage, overheating, output phase loss, etc.
Display		Large screen LCD, Chinese and English display modes. Display current three-phase output current, grid voltage, fault type, systemparameters and operating parameters.
Degree of protection		IP20(55kW and below) / IP00(75kW and above)
Cooling mode		Forced air cooling /natural cooling
Installation method		Wall mounted
Environment condition	Equipment site	Indoor, no direct sunlight, no dust, corrosive gas, fammable gas, oil mist,water vapor, dripping water or salt, etc.
	ambient temperature	-25℃ ~+40℃
	ambient humidity	Below 90%(no condensation)
	Vibration intensitty	Below 0.5g(acceleration)
	Altitude	Below 1000m(derating is required if the altitude exceeds)
Adapter motor		15~320KW

General Wiring Diagram

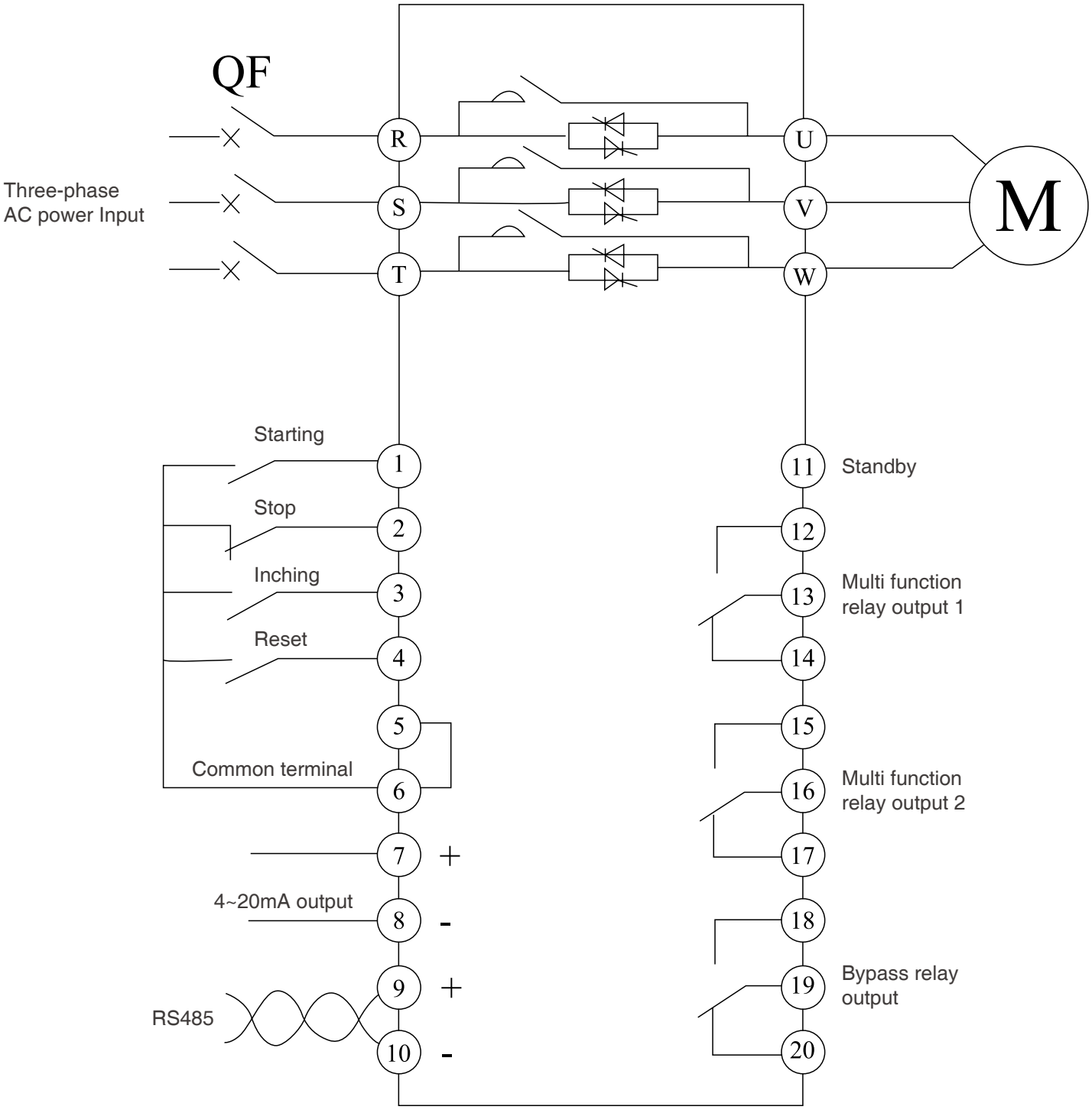

Janson Controls Technologies(Shenzhen)Co.,Limited

Add: 3rd Floor, Building E, Fuxing Industrial Park, No.110, Zhangqi Road, Guixiang Community, Guanlan Street, Longhua District, Shenzhen, China

Tel:+86-0755-29611160

Http: //www.jansoncontrols.com

Email: info@jansoncontrols.com